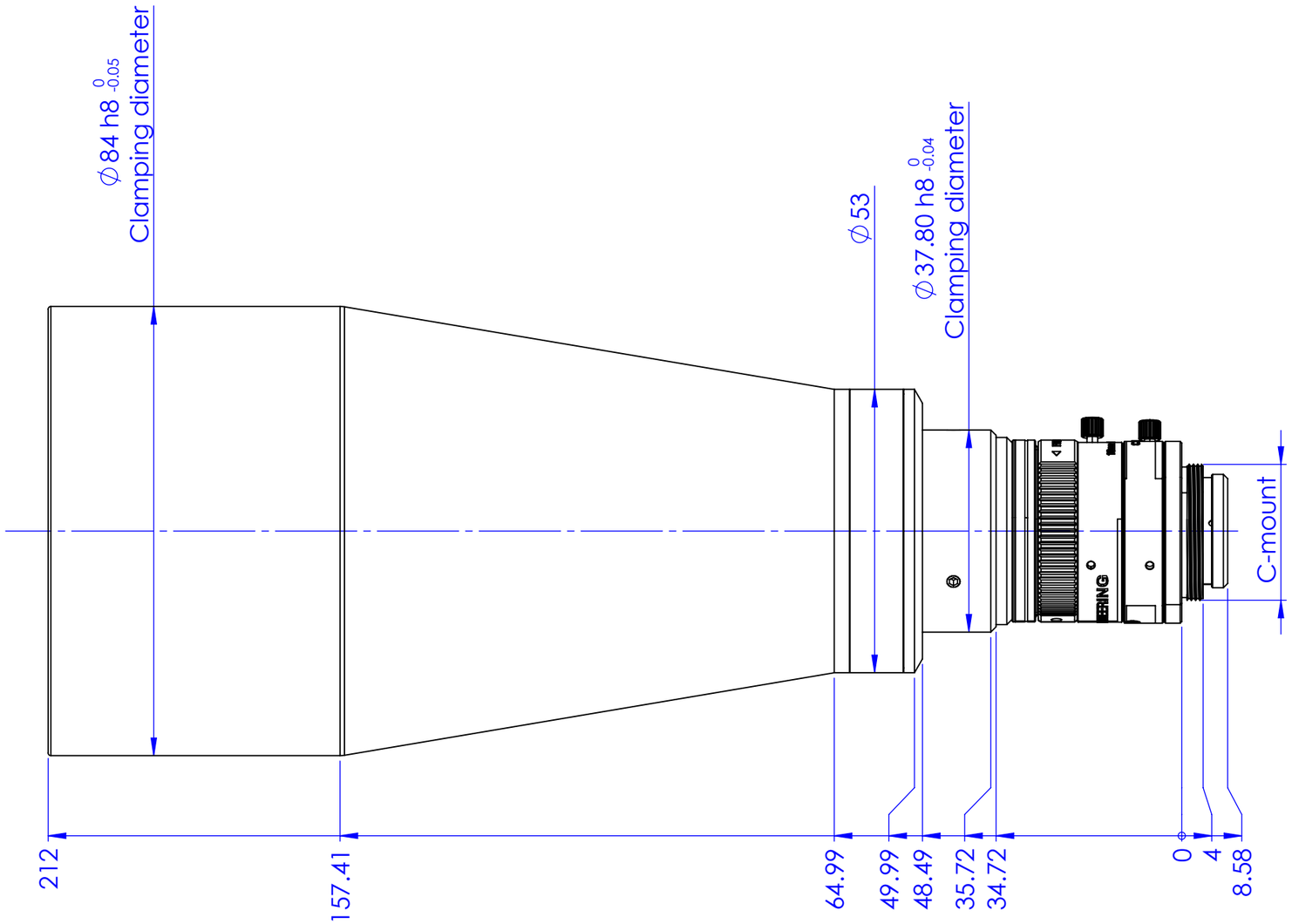

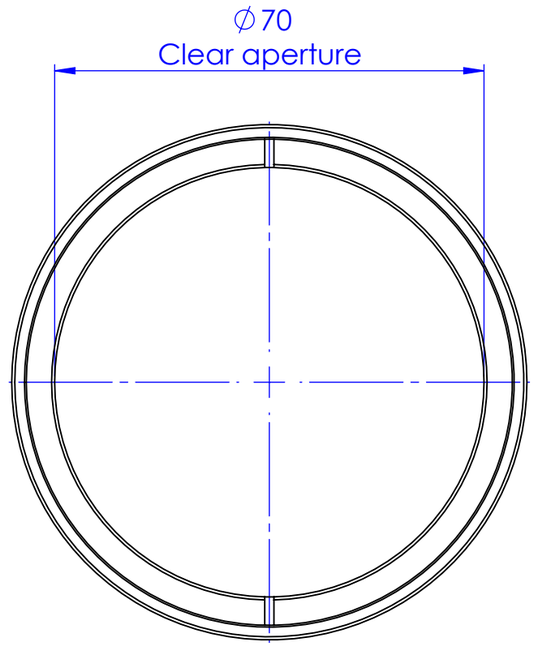

Material	N.A.	Mass	1008 g
Surface treatment		Scale	1:1
		Part No.	CO33855

Geometrical tolerance (ISO 2768-2)								Class	K
Linear tolerance (ISO 2768-2)								Class	m
0.5 ÷3	>3÷ 6	>6÷ 30	>30÷ 120	>120 ÷400	>400÷ 1000	>1000 ÷2000	>2000 ÷4000	Undimensioned bevels	0.5x45°
±0.1	±0.1	±0.2	±0.3	±0.5	±0.8	±1.2	±2	Undimensioned radii	R 0.5

all dimensions are in mm

	Date	Name
Designed	13/05/2024	Rodella
Drawn	10/06/2024	Rodella
Checked	12/07/2024	Rodella

Description: PC23020XC

Drawing No. DP 33855-A

Sheet 1/1

OPTO ENGINEERING

OPTO ENGINEERING S.p.A. - Mantova, Italy - Tel. +39 0376699111 - www.opto-e.com

Secret and confidential - All rights reserved - No copy, dissemination or circulation is allowed unless specifically authorized in writing by OPTO ENGINEERING S.p.A. - Any violation shall be legally prosecuted.