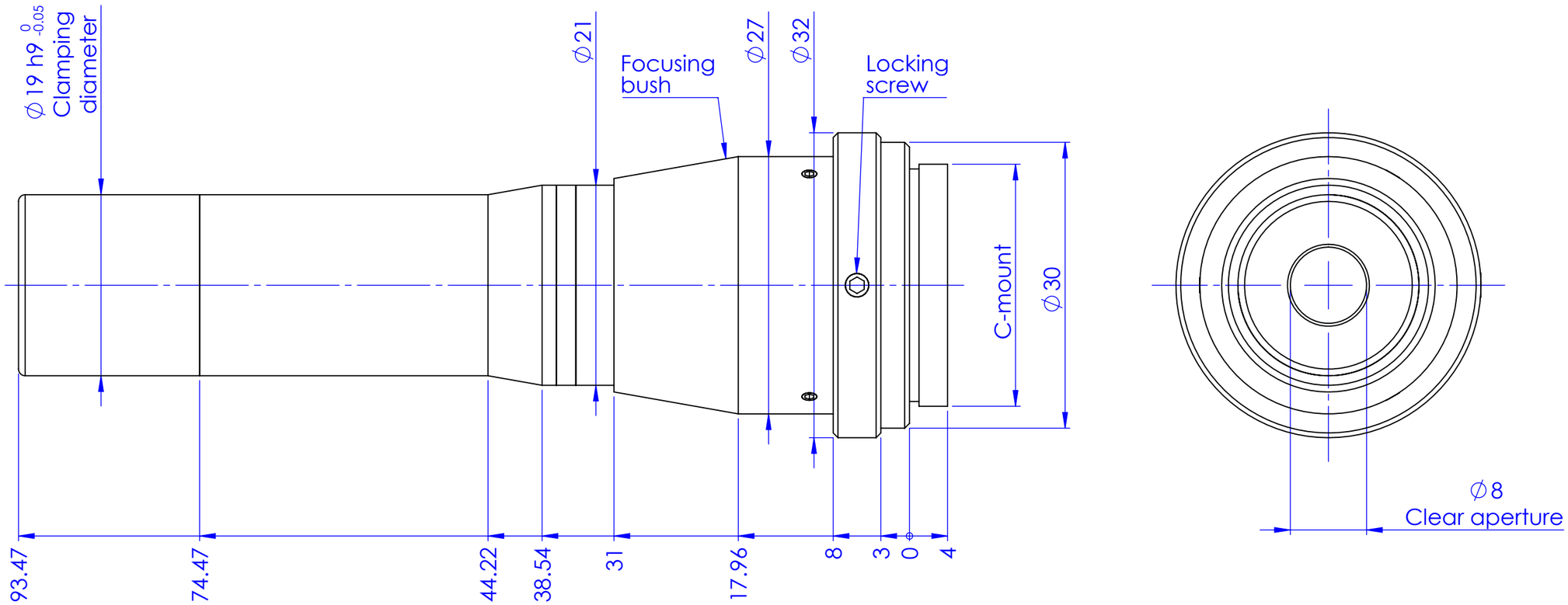

Material	N.A.	Mass	71 g
Surface treatment		Scale	2:1
Part No.	CO33721		

Geometrical tolerance (ISO 2768-2)	Class	K
Linear tolerance (ISO 2768-2)	Class	m

0.5 ÷3	>3÷ 6	>6÷ 30	>30÷ 120	>120 ÷400	>400÷ 1000	>1000 ÷2000	>2000 ÷4000
±0.1	±0.1	±0.2	±0.3	±0.5	±0.8	±1.2	±2

Undimensioned bevels	0.5x45°
Undimensioned radii	R 0.5

all dimensions are in mm

Description: HCN13040

	Date	Name
Designed	05/02/2024	Rodella
Drawn	26/03/2024	LSpanu
Checked	26/03/2024	LSpanu

Drawing No. DP 33721-A

Sheet 1/1

OPTO ENGINEERING

OPTO ENGINEERING S.p.A. - Mantova, Italy - Tel. +39 0376699111 - www.opto-e.com

Secret and confidential - All rights reserved - No copy, dissemination or circulation is allowed unless specifically authorized in writing by OPTO ENGINEERING S.p.A. - Any violation shall be legally prosecuted.