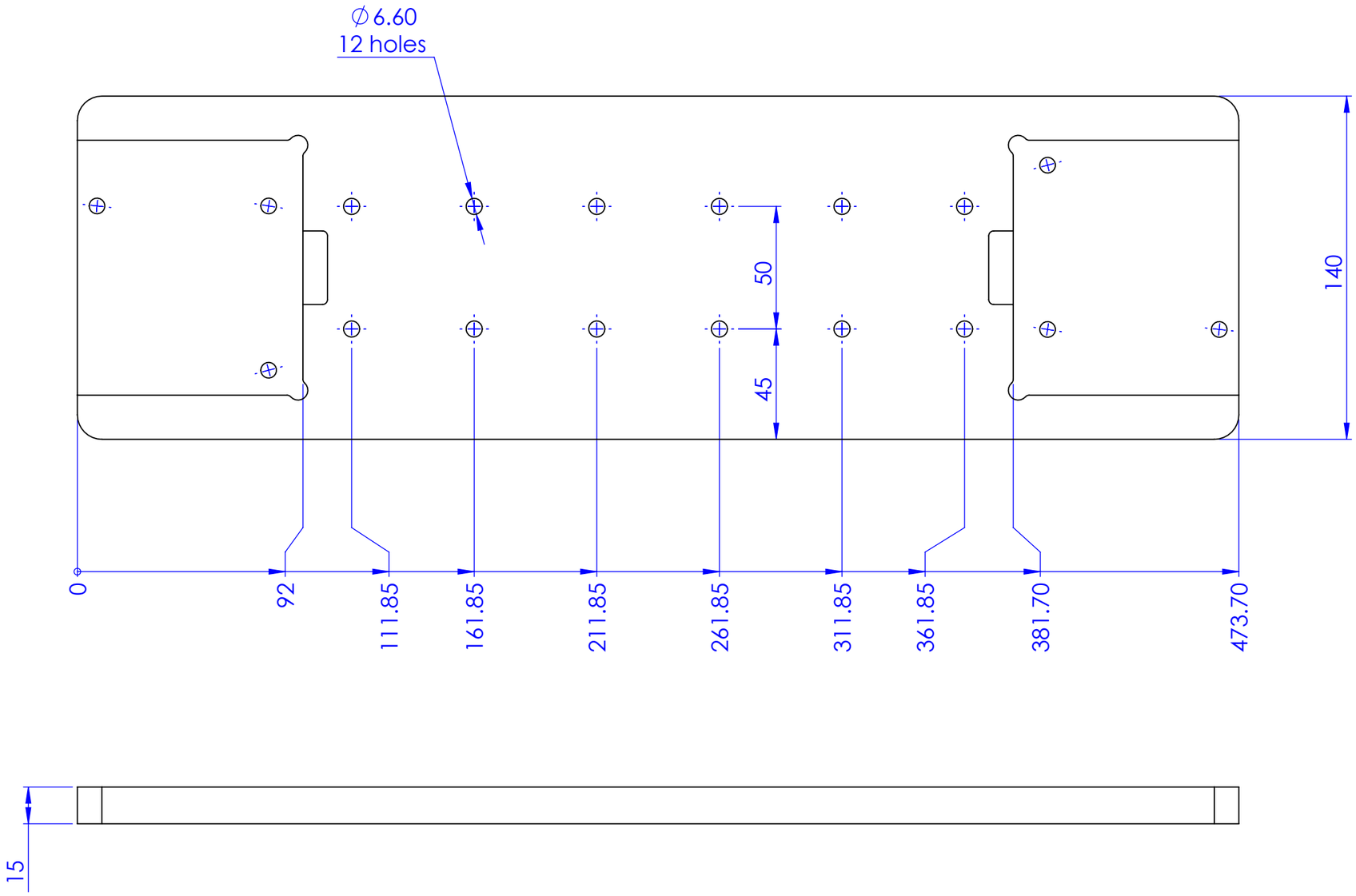

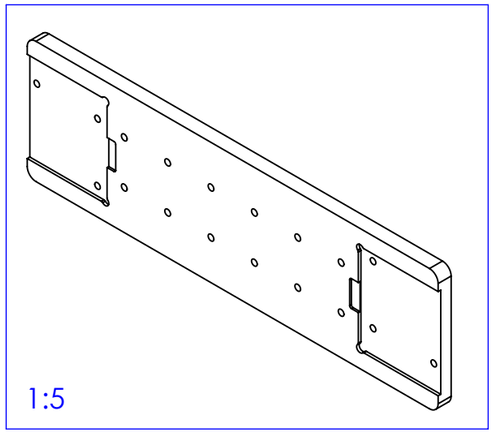

Material	Aluminium - UNI-EN 573 EN AW 6082												Mass	2485 g	Scale 1:2
Surface treatment	Gray Satin Anodizing												Part No.	CO24110	
Geometrical tolerance (ISO 2768-2)								Class	K	Undimensioned bevels	0.5x45°		Description	CMPTCR064	
Linear tolerance (ISO 2768-2)								Class	m						
0.5 ÷3	>3÷ 6	>6÷ 30	>30÷ 120	>120 ÷400	>400÷ 1000	>1000 ÷2000	>2000 ÷4000	Undimensioned radii	R 0.5						
±0.1	±0.1	±0.2	±0.3	±0.5	±0.8	±1.2	±2								

all dimensions are in mm

	Date	Name
Designed	09/06/2015	Vasconetto
Drawn	29/02/2016	Rodella
Checked		

Drawing No. DP 24110-C

Sheet 1/1

OPTO ENGINEERING

OPTO ENGINEERING S.r.l. - Mantova, Italy - Tel. +39 0376699111 - www.opto-e.com

Secret and confidential - All rights reserved - No copy, dissemination or circulation is allowed unless specifically authorized in writing by OPTO ENGINEERING S.r.l. - Any violation shall be legally prosecuted.