UNIT	ITEM	REVISION	1.2
mm	VL-8-16K-M72-V1.2		'20.02.07

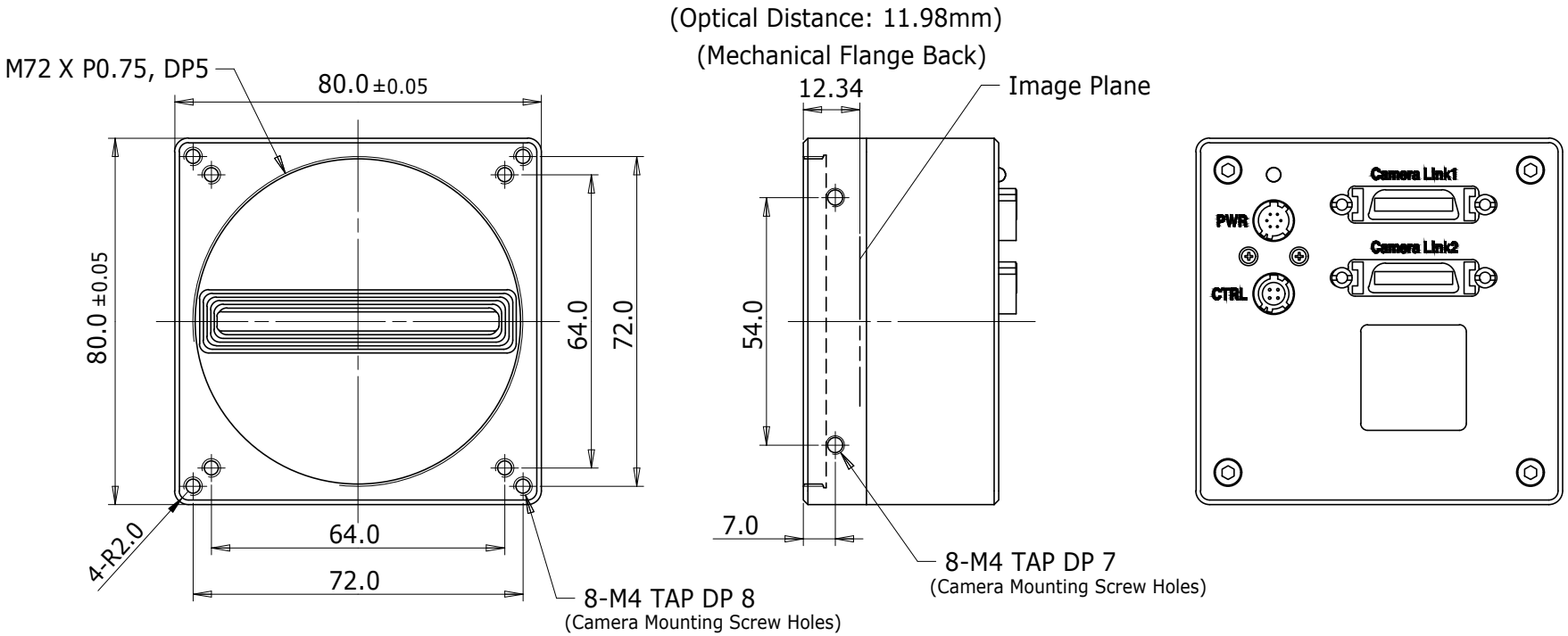

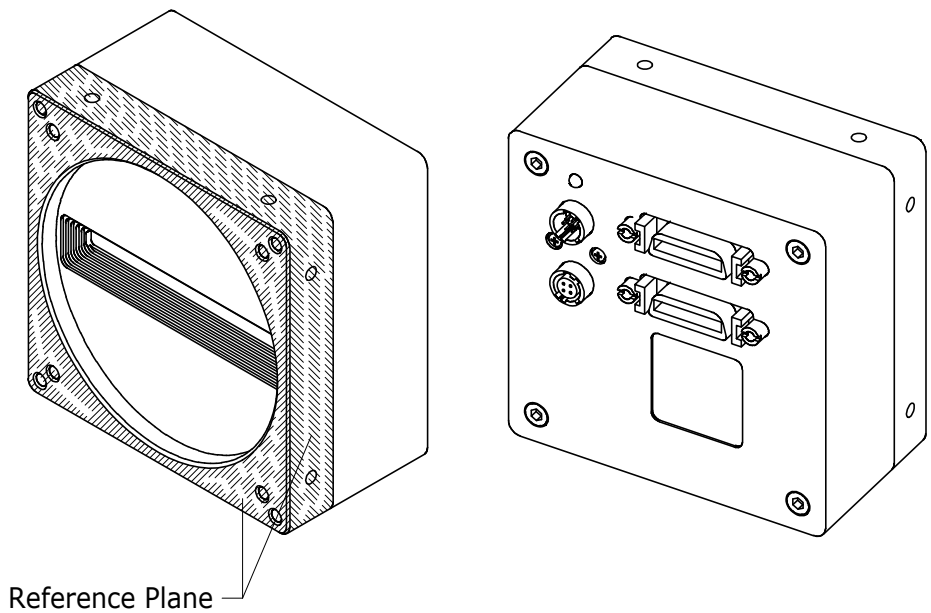

MODEL NAME	
Lens Mount: M72xP0.75 mount	
1	VL-8K7C-M80F-2
2	VL-16K3.5C-M40F-1