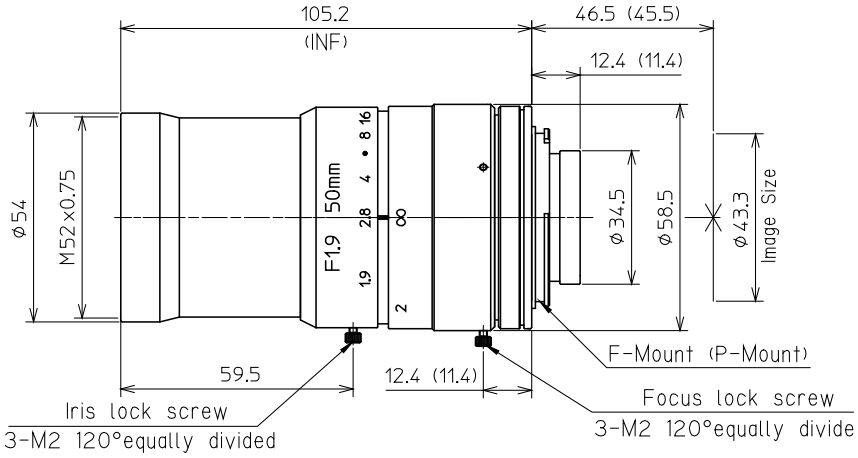

Model Name		LM50-IR
Focal Length (mm)		50
Image Format (mm)		φ43.3
IR Corrected Design		400–1000nm
Iris Range		F1.9～F16
Focusing Range (m)		0.5～∞
Control	Iris	Manual
	Focus	Manual
TV Distortion at φ43.3		−0.54%
at φ22.5 (1.2″Format)		−0.18%
at φ16 (1″Format)		−0.12%
Back Focal Length in air (mm)		34.6mm
Mechanical Back Focal Length in air (mm)		34.1mm
Mount		F-mount , P-mount
Flange Back (F-Mount)		46.5mm
Flange Back (P-Mount , M42×1)		45.5mm
Filter size (mm)		M52X0.75
Size (mm)		φ58.5×117.5
Weight (g)		600g (Preliminary)
Temperature Range		−10℃～+45℃

Main Characteristics

- Large Format
- IR Corrected Design
- Broad Band Coating
- Low Distortion

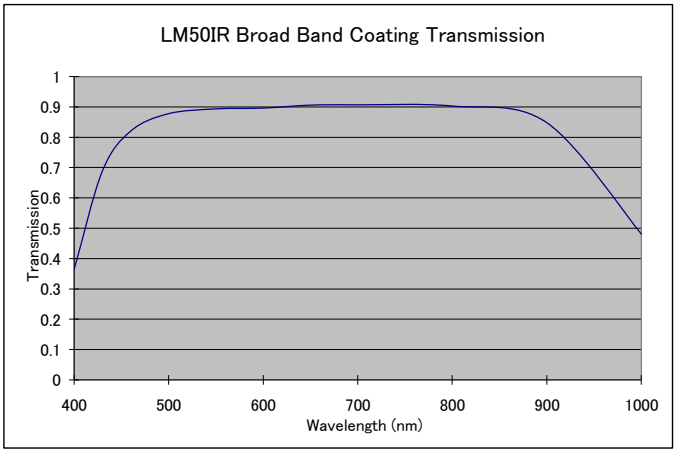

Kowa Company, Ltd.
Electronics and Optics Division
No. 4-14, 3-chome, Nihonbashi-Honcho, Chuo-ku, Tokyo 103-8433, Japan
Phone : +81-(3) 3279-7330
Facsimile : +81-(3) 5255-7516 http://www.kowa.co.jp
E-mail : info@kowa.co.jp http://www.kowa-usa.com

Kowa Europe GmbH
Immermannstrasse 43B
40210 Düsseldorf F.R. Germany
Phone: (211) 179354-0
Facsimile: (211) 161952

Kowa Optimed, Inc.
20001 So. Vermont Ave.
Torrance, CA 90502, U.S.A
Phone: (310) 327-1913
Facsimile: (310) 327-4177
E-mail: kowa-usa-info@kowa.com
Homepage: http://www.kowa-usa.com