REVISIONS			
REV.	DESCRIPTION	DATE	APPROVED
A	INITIAL RELEASE	4/7/2013	
B	REMOVED UNNEEDED PART- SHEET 2	6/11/2013	
C	CHANGED HEAT SINK (ITEM 5) & ADDED ADDITIONAL SCREWS- SEE SHEET 2	8/7/2013	
D	UPDATED SCREW QUANTITY FOR LENS; SEE SHEET 2	2/3/2014	
E	CHANGED LENS SCREW LOCATIONS TO BE CENTERED ON HOUSING LANDS	12/1/2014	

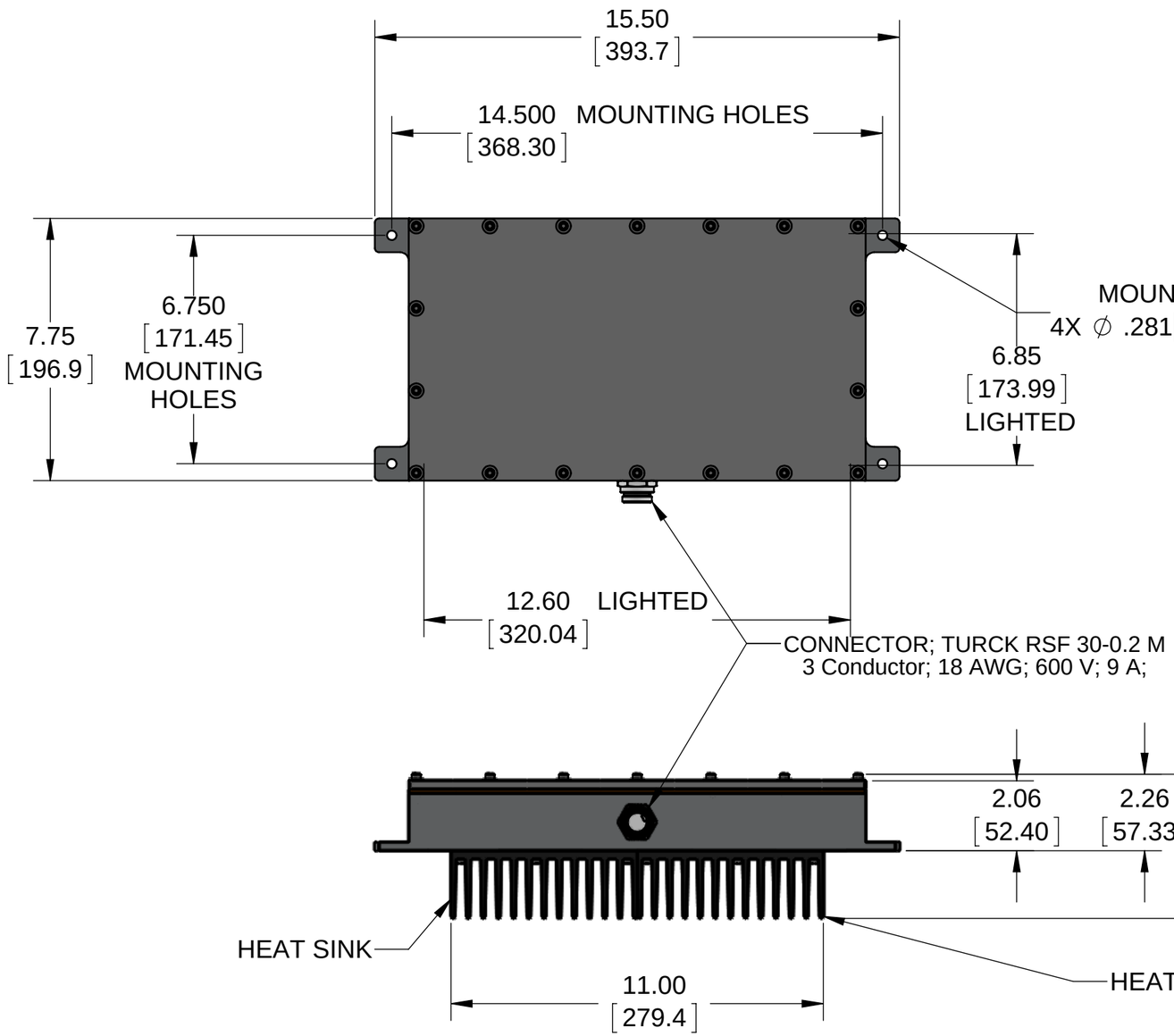

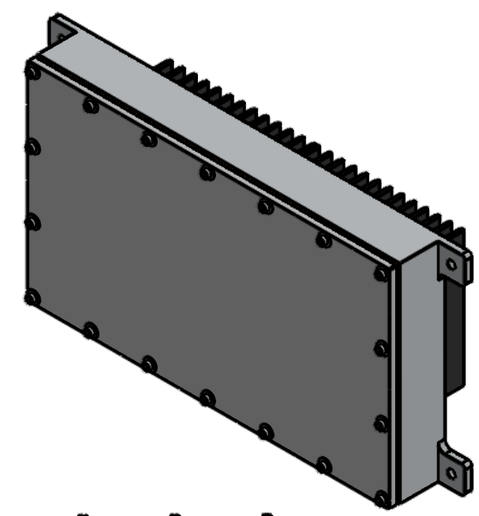

Metaphase Technologies, Inc. 211 Sinclair Road, Suite 100, Bristol, PA. 19007 215-639-8699 Fax 215-639-0977

QUANTITY: Per order

MATERIAL: Per BOM

FINISH: Black Anodize

TREATMENT: N/A

TOLERANCE/FINISH

UNLESS OTHERWISE SPECIFIED

INCHES[MM]				125√ RMS [RA3.2um]
X	.X	.XX	.XXX	
[±.76]	±.030 [±.25]	±.010 [±.13]	±.005	ANGLES±1°

THIS DOCUMENT IS THE PROPERTY OF **METAPHASE TECHNOLOGIES, INC.** WHOM MAY LOAN IT, SUBJECT TO RETURN UPON DEMAND. IT INCLUDES CONFIDENTIAL & PROPRIETARY INFORMATION WHICH MAY NOT BE DISCLOSED TO ANY THIRD PARTY, AND/ OR USED FOR ANY PURPOSE CONTRARY TO IT'S INTENDED USE, WITHOUT THE EXPRESSED PRIOR WRITTEN CONSENT OF **METAPHASE TECHNOLOGIES, INC.**

TITLE: Top Assy.- Flood Light

USED ON: Per customer

SIZE	DRAWING NUMBER	REV
B	FL300X150-1	E

SCALE 1:8 SHEET 1 OF 2

Approval Signature

/ /
Date