Rev No.	Description	Date	Name

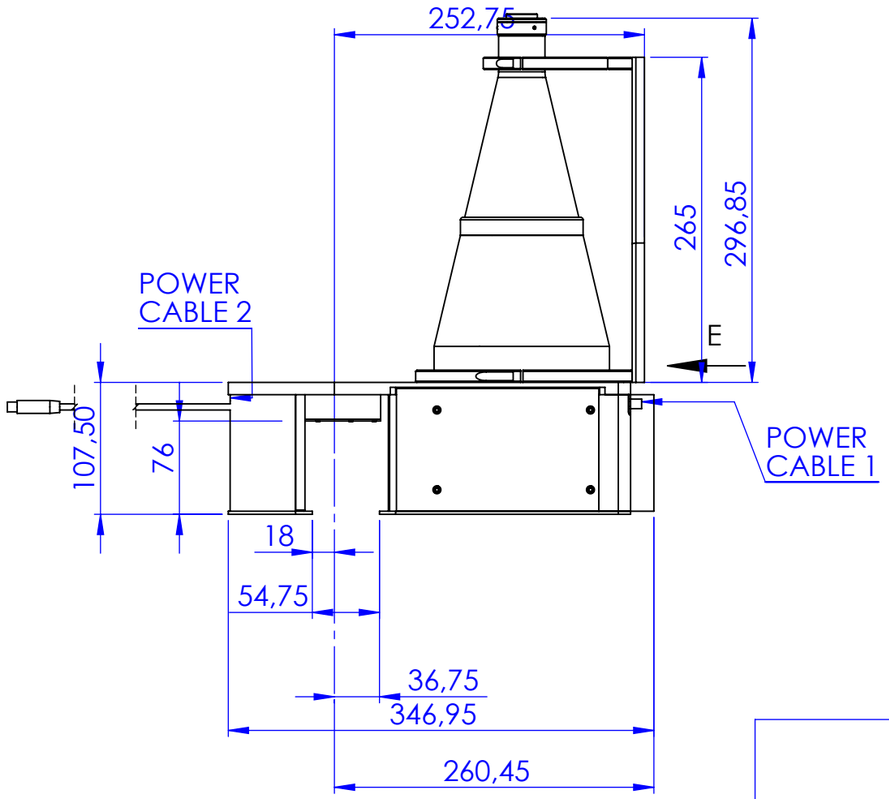

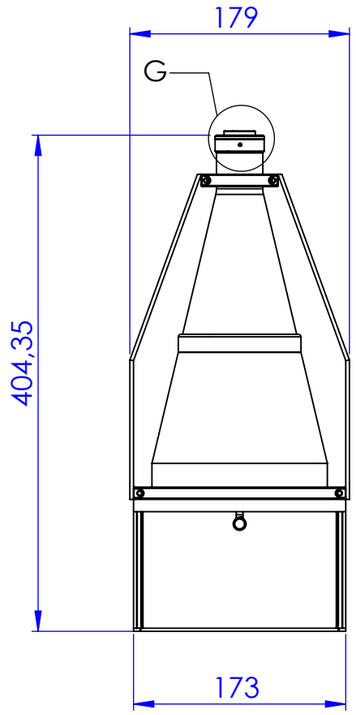

VISTA E

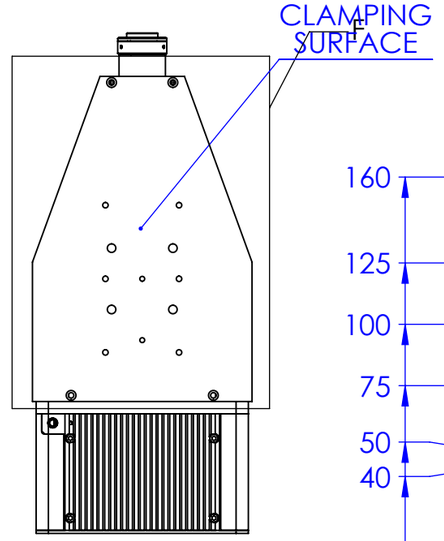

DETAIL F
SCALE 2 : 5

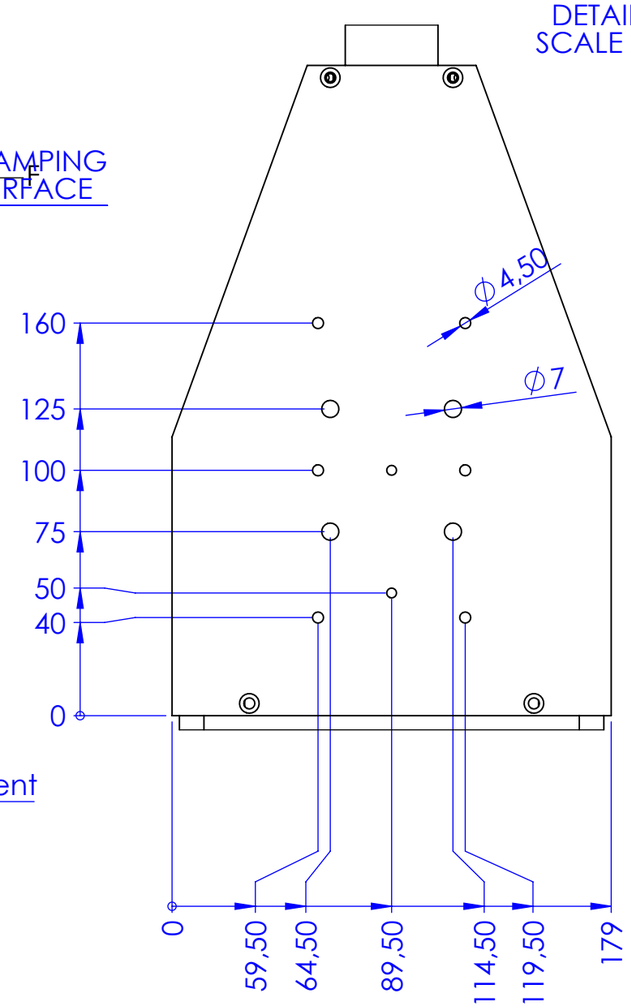

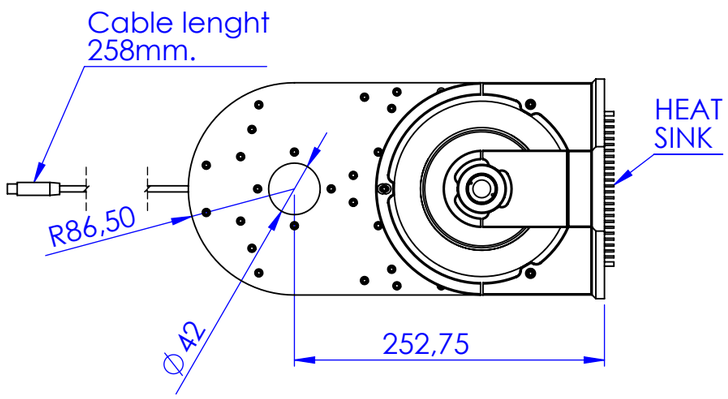

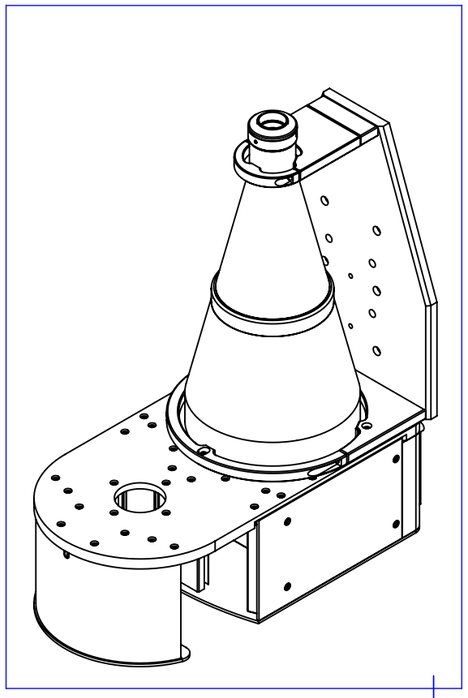

Phase adjustment

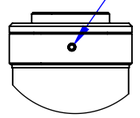

DETAIL G
SCALE 1 : 2

Material	N.A.									Mass	10666,384 g
Surface treatment	N.A.									Part No.	CO30029
Geometrical tolerance (ISO 2768-2)								Class	K	Undimensioned bevels	0.5x45°
Linear tolerance (ISO 2768-2)								Class	m	Undimensioned radii	R 0.5
0.5 ÷3	>3÷ 6	>6÷ 30	>30÷ 120	>120 ÷400	>400÷ 1000	>1000 ÷2000	>2000 ÷4000				
±0.1	±0.1	±0.2	±0.3	±0.5	±0.8	±1.2	±2				

all dimensions are in mm

	Date	Name
Designed	19/03/2014	Vasconetto
Drawn	25/05/2020	Rodella
Checked		

Scale 1:5

Description: Obbiettivo 360 TCCAGE12096HP

Drawing No. DP 30029-A

Sheet 1/1

OPTO ENGINEERING

OPTO ENGINEERING S.r.l. - Mantova Italy - Tel. +39 0376 699111 - www.opto-engineering.com

Secret and confidential - All rights reserved - No copy, dissemination or circulation is allowed unless specifically authorized in writing by OPTO ENGINEERING S.r.l. - Any violation shall be legally prosecuted.