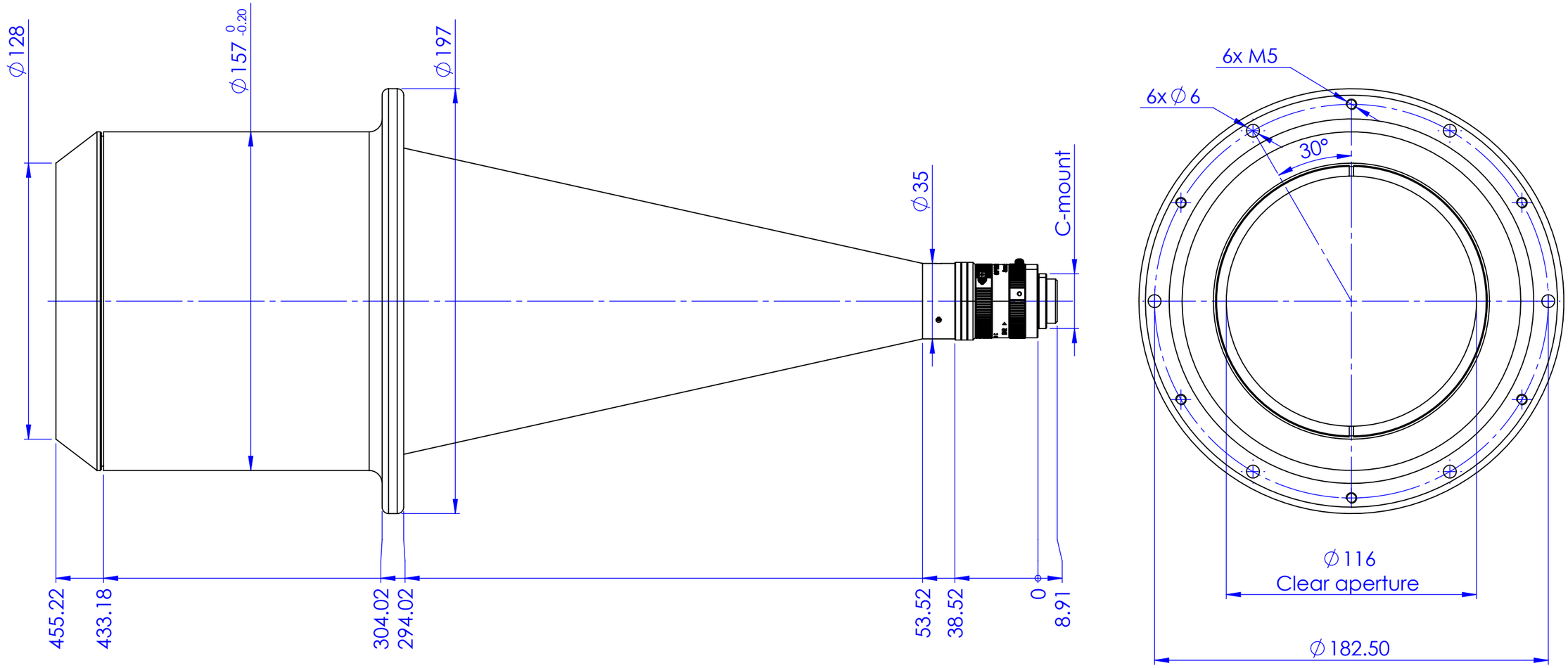

Material	N.A.
Surface treatment	
Mass	6673 g
Scale	1:2
Part No.	CO18471
Description	PC13030HP
Drawing No.	DP 18471-A
Sheet	1/1

Geometrical tolerance (ISO 2768-2)	Class	K
Linear tolerance (ISO 2768-2)	Class	m

Undimensioned bevels	0.5x45°
Undimensioned radii	R 0.5

0.5 ÷3	>3÷ 6	>6÷ 30	>30÷ 120	>120 ÷400	>400÷ 1000	>1000 ÷2000	>2000 ÷4000
±0.1	±0.1	±0.2	±0.3	±0.5	±0.8	±1.2	±2

all dimensions are in mm

	Date	Name
Designed	26/02/2015	Bna
Drawn	14/12/2021	Ccharly
Checked	04/01/2022	Rizzotto

OPTO ENGINEERING

OPTO ENGINEERING S.r.l. - Mantova, Italy - Tel. +39 0376699111 - www.opto-e.com

Secret and confidential - All rights reserved - No copy, dissemination or circulation is allowed unless specifically authorized in writing by OPTO ENGINEERING S.r.l. - Any violation shall be legally prosecuted.