FOR MISSING DIMENSIONS SEE DW26180-A.STEP

Rev No.	Description	Date	Name

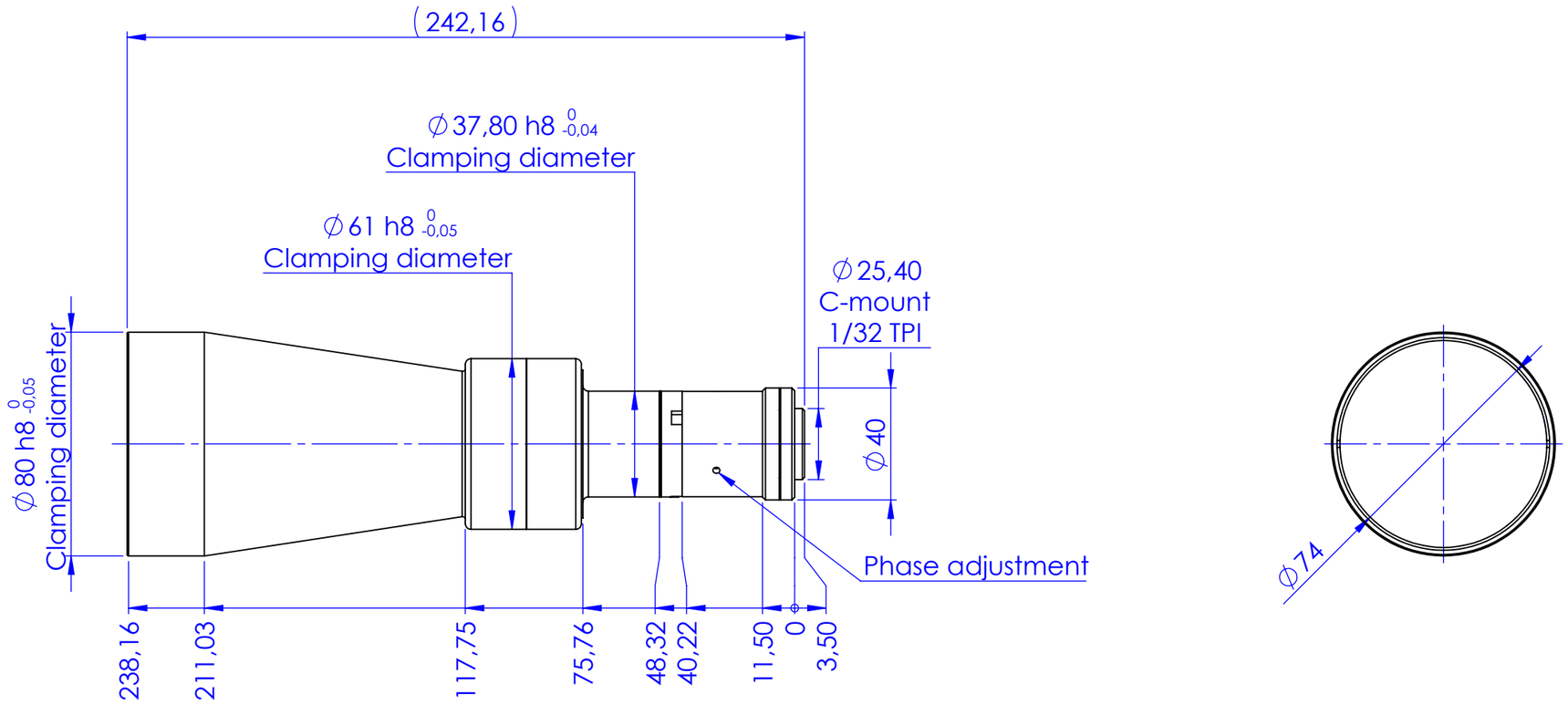

Geometrical tolerance (ISO 2768-2)							Class	K	Undimensioned bevels	0.5x45°
Linear tolerance (ISO 2768-2)							Class	m		
0.5 ÷3	>3÷ 6	>6÷ 30	>30÷ 120	>120 ÷400	>400÷ 1000	>1000 ÷2000	>2000 ÷4000	Undimensioned radii	R 0.5	
±0.1	±0.1	±0.2	±0.3	±0.5	±0.8	±1.2	±2			

all dimensions are in mm

Material: N.A.

Surface treatment: N.A.

Mass: g

Scale: 1:2

Part No.: CO26180

Description: TC1MHR056-C

	Date	Name
Designed	10/07/2017	Vasconetto
Drawn	05/07/2018	Vasconetto
Checked		

Drawing No.: DP 26180-A

Sheet: 1/1

OPTO ENGINEERING

OPTO ENGINEERING S.r.l. - Mantova Italy - Tel. +39 0376 699111 - www.opto-engineering.com

Secret and confidential - All rights reserved - No copy, dissemination or circulation is allowed unless specifically authorized in writing by OPTO ENGINEERING S.r.l. - Any violation shall be legally prosecuted.