REV	CHANGE RECORD AND DATE	CH

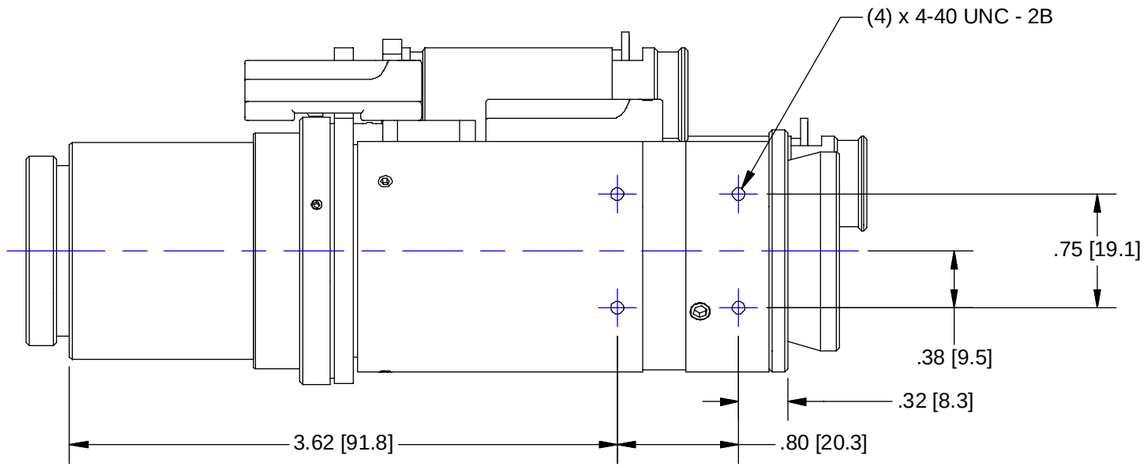

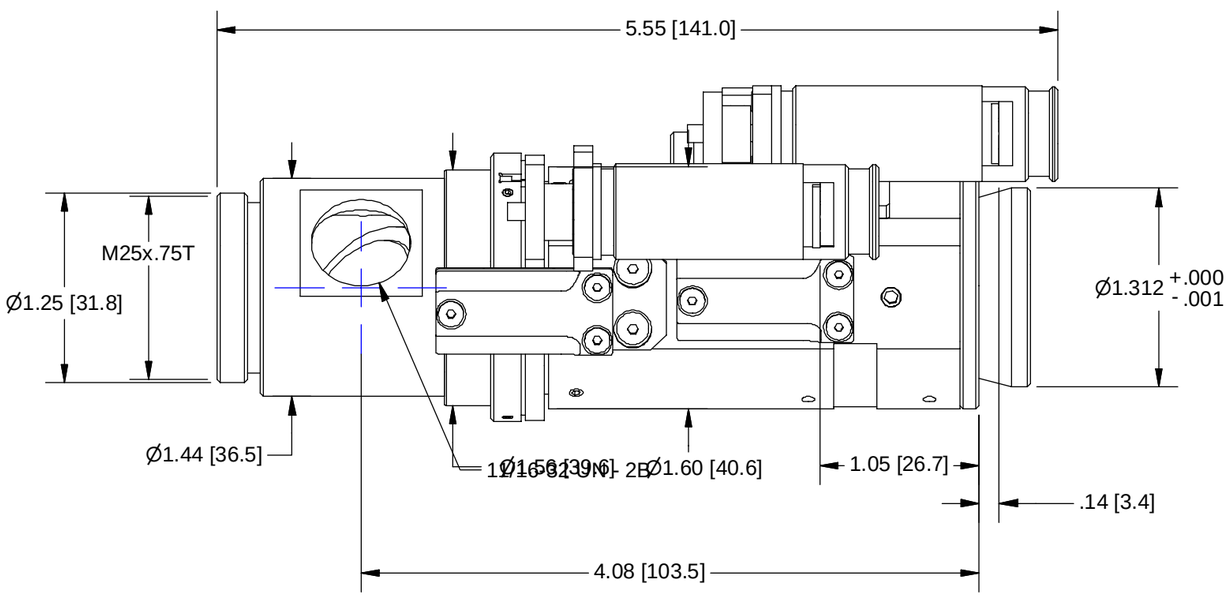

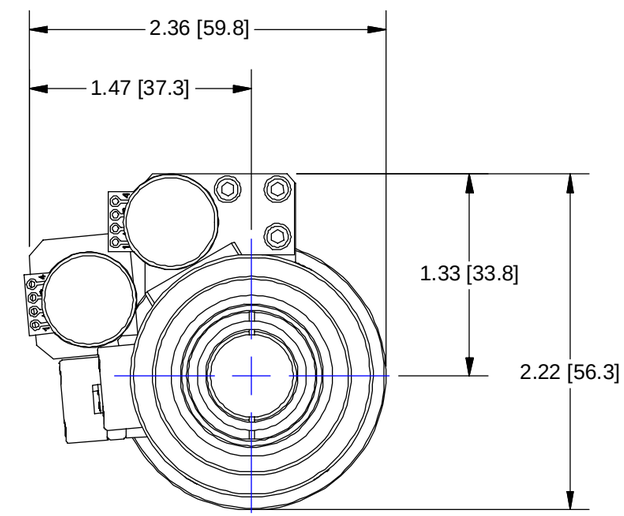

2-PHASE MOTOR PINOUT

PIN 3 = +5Vdc
PIN13 = COMMON
PIN 8 = FAR LIMIT
PIN 12 = NEAR LIMIT
PIN 1 = MOTOR A+
PIN 7 = MOTOR A-
PIN 6 = MOTOR B+
PIN 11 = MOTOR B-

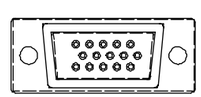

15 PIN HIGH DENSITY
D-SUB

OUTLINE

USED ON:

MATERIAL:

FINISH:

CHAMFER ALL THREADS
30˚ TO ROOT DIAM.

UNLESS OTHERWISE SPECIFIED DIMENSIONS ARE IN INCHES AND INCLUDE CHEMICALLY APPLIED OR PLATED FINISHES

TOLERANCES:
DEC. .XXX ± .005
DEC. .XX ± .010
FRACT. ± 1/64
ANGLES ± 30'
CONCENTRICITY .003 TIR
BREAK ALL SHARP EDGES
.005 MIN. .010 MAX
MAX. SURF. ROUGHNESS 32

P/N SUFFIX DEFINITION
-1 CONVERSION COATING
-2 PAINTING
-3 MARKING
-R REWORK

SCALE: 1:1
DR.: R. PODLENA
CH.: P. BONAFEDE
APP.:
DATE DR.: 11/22/2002
DO NOT SCALE DRAWING

THE CONTENTS OF THIS DOCUMENT ARE PROPRIETARY TO NAVITAR, ITS USE IS AUTHORIZED ONLY FOR RESPONDING TO REQUEST FOR QUOTATION OR PERFORMANCE OF WORK FOR NAVITAR

0.0 inch 1.0
0.0 mm 25.0

NAVITAR
ROCHESTER, NEW YORK

MTR (STEP) 6X UZ & 3mm FF w/LS (HE) & CP

SIZE		REV
B	1-62317 SHEET 1 OF 1	C