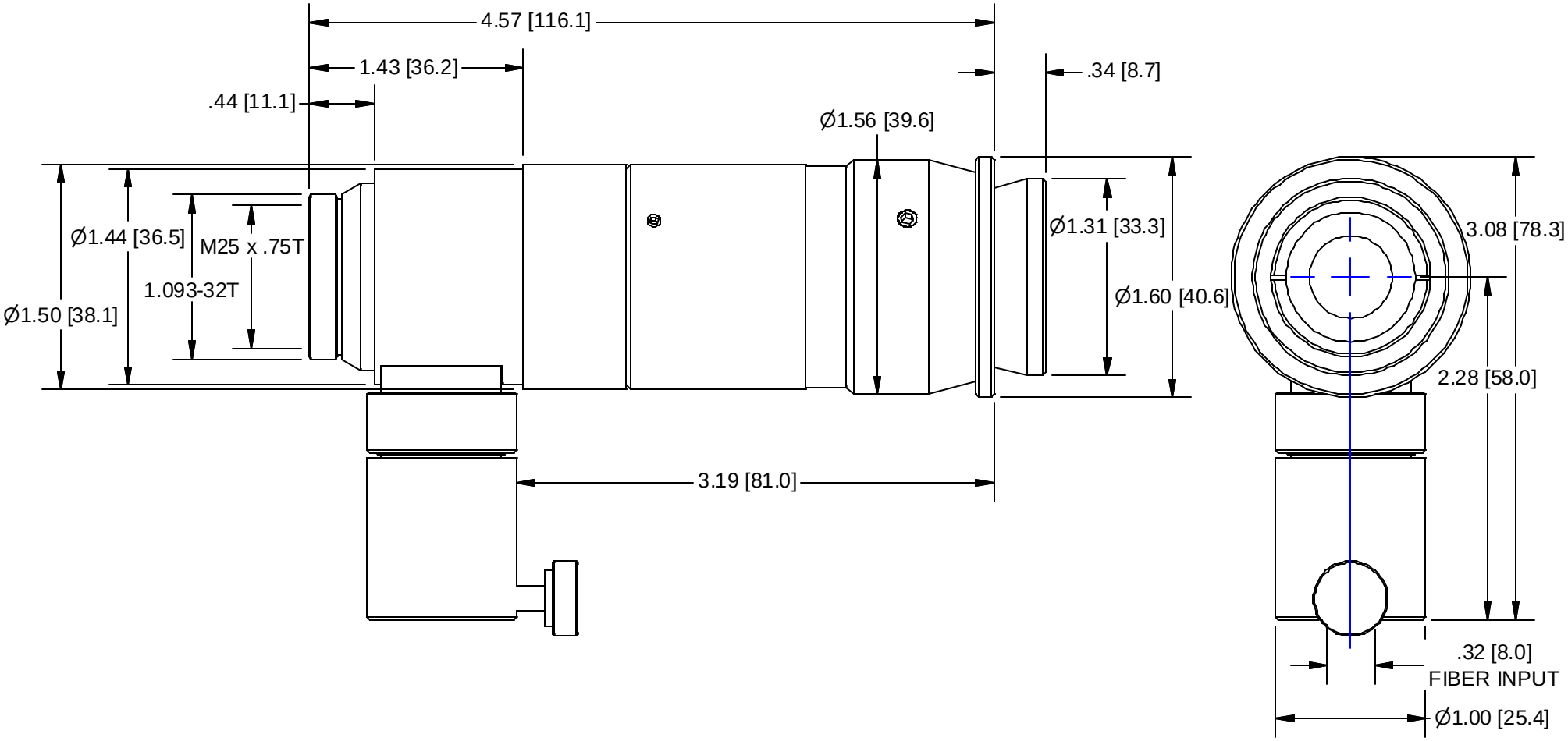

NOT SHOWN:
3-60160
3-60187
OBJECTIVE COUPLERS

USED ON:

OUTLINE

MATERIAL:

FINISH:

CHAMFER ALL THREADS 30˚ TO ROOT DIAMETER

UNLESS OTHERWISE SPECIFIED DIMENSIONS ARE IN INCHES AND INCLUDE CHEMICALLY APPLIED OR PLATED FINISHES

TOLERANCES AS FOLLOWS

DEC. .XXX	± .005
DEC. .XX	± .010
FRACT.	± 1/64
ANGLES	± 30'
CONCENTRICITY	.003 TIR

BREAK ALL SHARP EDGES .005 MIN. .010 MAX.

MAX. SURF. ROUGHNESS: 32

P/N SUFFIX DEFINITION

-1 CONVERSION COATING
-2 PAINTING
-3 MARKING
-R REWORK

SCALE: 1:1

DR: DJM

CH:

APP:

DATE DR: 10/10/2001

DO NOT SCALE DRAWING

THE CONTENTS OF THIS DOCUMENT ARE PROPRIETARY TO NAVITAR, ITS USE IS AUTHORIZED ONLY FOR RESPONDING TO REQUEST FOR QUOTATION OR PERFORMANCE OF WORK FOR NAVITAR

0.0 inch 1.0

0.0 mm 25.0

NAVITAR
ROCHESTER, NEW YORK

6X ULTRA w/COAX

SIZE		REV
A	1-60920_OL SHEET 1 OF 1	B